MacBone
INDUSTRIES LTD.

MODEL SH24-6

Silent Running Rooftop
Self Contained, Hydraulically Driven
Air Conditioning Unit

- **INSTALLATION**
- **OPERATION**
- **MAINTENANCE**

Literature #B1705
Revision 02/17/05

8790 Park Central Dr., Richmond, VA 23227 Ph: 804-264-3603 Fx: 804-264-3070

TABLE OF CONTENTS

Product Description 3

Uncrating.....4

Subbase and Air Duct Installation 4

Ordering Air Ducts 6

Model SH24-6 Installation.....6

Hydraulic Connections.....7

Electrical Connections 7

System Checkout 8

System Operation.....9

Service:
- Air Filters.....9
- Refrigeration Check.....10
- Lubrication.....10
- Belts 11

Helpful Hints from the field.....12

Diagrams:
- Belt Drive System.....14
- Air Filter Locations.....14
- Unit & Subbase Installation.....15
- Rooftop Cutouts.....16
- Wiring 17

Specifications.....18

Hydraulic and Electrical Troubleshooting.....19

Test Report.....20

INSTALLATION, OPERATION & MAINTENANCE

MACBONE MODEL SH24-6
(Serial numbers 052 and up)
PRODUCT DESCRIPTION

The *MacBone* Series SH24, 24,000 BTU/hr., air conditioning unit, is an overhead mounted, unitary, or self-contained unit, with a closed, precharged refrigeration circuit, driven by a single piston type, integral, hydraulic motor. The design concept is derived from the need for an air conditioning unit for industrial applications where the unit can be quickly removed for service without involving the sealed refrigeration circuit. Cooling is provided by a thermostatically controlled automotive type compressor, using refrigerant 134A. The condenser fan and evaporator blower share a common shaft, driven by the hydraulic motor with sufficient power to produce substantial condenser air flow even with a filter on the outside coil, thus insuring reliable performance even in a heavily dust laden environment. Substantial power delivered to the inside air blower also assures delivery of full system capacity under all conditions. Induction of 10% outside air provides cab pressurization to exclude dust and other contaminants from entering the cab environment.

For the SH24 series units, an optional sub base with shock mounts is available. All units utilize non-CFC, R-134A refrigerant, measure 36 1/2 x 24 1/2 x 12 1/2 inches high and weigh 146 pounds. The subbase and air duct weigh 30 pounds, for a total rooftop weight of 176 pounds. Hydraulic lines are #6, supply and return, up to 40'. The motor has an external case drain to protect its shaft seal. Four 1/2 inch SAE mounting bolts provide for quick removal for service or replacement. The dual V belt drive system has an automatic tensioner and operates in a closed, ventilated area. Recommended operating time before overhaul is 6000 hours. Recommended unit life is four overhaul cycles. Note, however, that at the end of the 2001 season, we are finding units with up to 6000 hours in need of drive belts only. We also note that four overhaul cycles will not be the limit.

Hydraulic drive input is usually, but not necessarily, from a pump driven by the vehicle's engine and utilizing the vehicle's hydraulic reservoir. Required flow is a constant 6 GPM, whenever the vehicle’s engine us running at a variable pressure from around 100 PSIG to 2300 PSIG. System pressure relief, provided by the installer, should be set at 2550 PSI. Electrical input of 3.5 amps, at 12 VDC, or 24 VDC is used only to activate the compressor clutch.

- - WARNING - -

This piston type hydraulic motor, as used in the MacBone model CHP24-6 unit, MUST, whenever it is rotating, have a positive back pressure, at the discharge fitting on the MacBone unit of at least 25 PSIG. Usually the pressure drop in the return line will provide this back pressure, however, if it does not, the MacBone back pressure device, model number BP65 must be installed in the “return to tank” line. If the return line back pressure drops below 25 PSIG, the motor piston followers can lift off of the swash plate, jam in the piston carrier and destroy the motor. Such motor destruction is not a warranty matter.

UNCRATING

The *MacBone* Series SH24 shipping pallet usually contains the following:

1. The SH24 Series unit.

2. The sub base, complete with four shock mounts to which the unit will be secured. (The subbase is under the unit but not attached.)

3. The unit weather cover.

4. Supply and return air ducts with air seal trim. (shipped inside the unit)

Remove the pallet straps and packing and lift off the unsecured weather cover. Using a suitable hoist, lift the unit clear of the pallet by the green lifting rod. Remove the sub base from the pallet. A set of air ducts will be found inside the unit, under the sub top, which is secured with (10) screws.

SUBBASE AND AIR DUCT INSTALLATION

GENERAL: The sub base is designed to be secured to the rooftop of the cab to be cooled, flat side down. The rooftop surface must be flat, continuous, level, and strong enough to support the 176 pound total weight of the SH24 Series air conditioning unit, sub base, air ducts and accessories. For installation on surfaces which are not flat or continuous or level, consult *MacBone* directly for specific instructions. Installation of the subbase on other than a level surface will distort the subbase resulting in air leaks, rainwater leaks and poor performance.

LOCATION: The sub base is 1/4 inch smaller all around than the maximum dimensions of the installed unit. When installed, the area around the unit must be open on all sides except the solid panel end, which may be placed within one inch of a vertical obstruction.

When installed, holes will be cut in the roof to match the rectangular return air hole and the square discharge air hole in the sub base. Be sure this cutting will not sever vital structures. Since the system controls are accessed by reaching into the return air area, this area must be accessible from the cab. The supply air, at full fan speed, is discharged at very high velocity, so the discharge air should not be located where it will blow directly onto an operator's station.

Note: If the return air area cannot be placed within reach of the operator, remote controls, which can be placed anywhere, are available.

SECURING: When a suitable location has been selected, drill the sub base and the rooftop for four to six through bolts or lag bolts which will secure the sub base to the roof.

- - I M P O R T A N T - -

For best security, place at least one holddown bolt within several inches of each of the four rubber shock mounts BUT DO NOT allow any portion of the bolt head or washer to be closer than one inch from the edge of either the return air or supply air hole. This

restricted area is reserved for the air duct securing flanges and is painted red. Remember, the roof must be absolutely flat so that the subbase can be sealed to the roof without having to bend or distort the subbase. Use additional holddown bolts as appropriate.

Flip the sub base over and run a bead of caulking, like silicone, around the outside edge, around the return air and supply air holes and around each of the bolt holes you drilled.

Flip the sub base back over and secure it with the bolts inserted FROM THE TOP. Fastener heads must not exceed 1/2" in height to insure they will not hit the bottom of the unit when the unit is secured to the subbase. If the nuts must be up, cut the bolts flush with the tops of the nuts.

Using whatever tools it takes, cut the return and discharge air holes through the rooftop to conform to the holes in the subbase. You may wish to cut these holes before securing the subbase. If you cut the holes first, it's OK to make them ¼" larger all around.

AIR DUCTS: Before placing the SH24 Series unit onto the subbase, supply and return air ducts must be dropped into place through the subbase from the top downward. The rubber edge trim remains up. These ducts are essential since they provide the necessary air seal between the bottom of the unit and the cab. Without them, dust laden outside air will come in and cooled air will leak out. It is important that you use sealer under the duct flanges. Additionally, the rubber trim goes between the top of the air duct and the bottom of the unit. This maintains a proper weather seal between the cab and the unit.

The two ducts are available in any length. To determine the optimum length, measure from the sub base upper surface downward to the ceiling surface inside the cab. Specify this length with the initial order; otherwise, 1" ducts will be shipped with the unit. Ducts longer than the optimum length are OK, but they must not be shorter.

Each duct is secured onto two studs protruding upward from the sub base. The securing nut and washer are furnished on the studs.

ADDED FEATURE: When the sub base is first installed, or if the SH24 Series unit is removed from the sub base for service, the unit weather cover may be placed directly over the sub base to secure the cab from the weather. To do this, use the same four thumbscrews which secure the weather cover to the unit. Note the four "clip nuts", two on each side, located on the long side of the sub base. Place the top over the sub base and screw the thumbscrews through the weather cover holes and into these clip nuts. Hold the cover centered over the sub base and tighten the knob screws only until snug--DO NOT DISTORT THE FLANGE AROUND THE WEATHER COVER EDGE.
When securing the sub base in this manner, the four 1/2" SAE unit-mounting bolts cannot be left screwed into the mounts. Just leave them loose in a bag on the sub base; they can't get out with the weather cover secured to the sub base and they will be there for reinstallation.

ORDERING AIR DUCTS

GENERAL: Each unit has two air ducts and each is vitally important to the operation of the unit. Without the ducts, which provide a seal between the cab and the bottom of the unit, return and discharge air will leak to the outside, resulting in substantial loss of capacity.

SPECIFYING: We keep return and discharge ducts on hand, ready to be trimmed to the length you need. The ducts should not be any longer than required to reach the surface of the cab ceiling. If they are too long, they become head knockers. If much too short, air can leak into the roof structure. Measure the distance from the sub base top surface to the ceiling surface and specify this as the duct length. Specify this length for each duct. If no length is specified with the order, 1" ducts will be supplied.

MODEL SH24-6 INSTALLATION

GENERAL: With the sub base and air ducts in place, the unit will be secured to the sub base shock mounts with four 1/2" SAE x 1/2" long hex head cap screws and lock washers which are furnished with the unit. Needed to complete the installation, will be a 12 or 24 VDC power supply, controlled by the engine ignition or power switch, a 6 GPM constant volume hydraulic oil supply, # 6 hydraulic supply and return lines, 2550 PSI relief valve, # 6 case drain line and the MacBone model BP65 back pressure device. See the warning on page 3 for more information.

MOUNTING THE UNIT: Lower the unit onto the sub base so that the four mounting holes in the chassis line up with the four shock mounts. (This assumes that the sub top has already been removed to get to the air ducts used with the subbase.) Using the 1/2 SAE hex bolts and lock washers from the plastic bag tied to the green lifting rod, secure the unit to the base. Grease the threads and do not over tighten. The four thumbscrews in the bag will be used to secure the weather cover; don't lose them. The surface of the cover is unpainted to reflect heat. Do not paint.

Note: The auxiliary condensate pan that is located under the TX valve in the evaporator chamber needs to be moved to access one of the four mounting bolt holes. To do this, remove the wing nut and lift the pan out of the way. When reinstalling the pan, be sure the lower flange of the pan is inserted between the main condensate pan and the evaporator fins so that the condensate will flow from the auxiliary pan into the main pan.

HYDRAULIC REQUIREMENTS

The MacBone series SH24-6 unit's require a *<u>continuous</u> drive oil flow at a **<u>constant volume</u> of 6 GPM +/- .5GPM, at a ***<u>variable pressure</u> from around 100 PSIG to 2300 PSIG at full unit speed in the cooling mode.

*<u>Continuous</u> means oil flows whenever the drive oil pump is operating regardless of whether the MacBone unit is operating or turned off. When the pump runs, oil must flow to, through and from the MacBone unit back to tank. Flow never stops until the pump stops.

**<u>Constant volume</u> means 6 GPM, +/- .5 GPM, must flow continuously, regardless of pump speed or engine speed, from idle to full operating speed. 6 GPM always flows until the pump stops.

***<u>Variable pressure</u> means that the continuous 6 GPM flow must be sustained with a back pressure from zero up to the relief valve recommended setting of 2650 PSIG. Fluctuations in discharge pressure seen by the pump must not affect the 6 GPM flow rate.

Continuous flow at constant volume and variable pressure is elementary in itself but often misunderstood. A competent hydraulics engineer or MacBone engineering must be consulted to specify the hydraulic oil system components. DO NOT GO THERE ALONE – LET US HELP. 888-MACBONE.

HYDRAULIC CONNECTIONS

To avoid motor shaft seal blowouts, the hydraulic motor has an external case drain, which must be routed directly to the reservoir. With this external case drain, high motor backpressure is not a factor, so #6 supply and return hoses are recommended. A relief valve ahead of the *MacBone* unit must be installed and set at 2550 PSI. If unit return oil will be used to power any downstream devices, consult MacBone engineering for limitations. The SUPPLY hose connects to the UPPER fitting on the rear of the motor. The RETURN hose connects to the BOTTOM fitting. The #6 JIC case drain exits the motor from the back. Route the hoses from the unit to the system hydraulic pump and oil reservoir, as appropriate.

- - WARNING - -

At the unit outlet fitting, where the drive oil is returned to the tank, there is a minimum back pressure requirement of 25 PSI, which must be maintained at all times. See the detailed warning on page 3 for return line back pressure requirements and consequences if the back pressure requirements are not met.

ELECTRICAL CONNECTIONS

All MacBone units have 12 VDC compressor clutch coils. For 24 VDC operation, power to the clutch passes through a power resistor, which reduces the voltage to the clutch to 12 VDC. Power should be supplied to the MacBone unit, fused to protect the wire, from the vehicle's engine control switch so that when the vehicle's engine is shut down, power to the MacBone unit is shut down also. Otherwise, the MacBone compressor clutch will drain the machine's battery.

-- WARNING --

Do not connect any electrical loads of any sort to the MacBone internal wiring system. To do so will unbalance the voltage to the compressor clutch coil resulting in compressor clutch coil failure.

Input + DC power for the MacBone unit is connected to the 5/16" red terminal on the side of the MacBone Voltage Sensing Module. Either + 12 VDC or + 24 VDC may be connected to this terminal. The MacBone Voltage Module will automatically determine the supply voltage and apply it properly to provide the required 12 VDC to the clutch. The ground is provided through a grounding spring mounted to the bottom of the MacBone unit chassis on the control panel end. Make sure that the grounding

spring contacts the MacBone unit subbase and that the subbase is grounded to the machine. Without a ground, the clutch will not engage and the unit will not cool.

SYSTEM CHECKOUT

Before re-installing the sub top, check system operation as follows: Push the cooling toggle switch up. Set both control handles in the vertical or straight down position. Turn the thermostat fully clockwise. Turn the ignition or machine power switch on and off and confirm hearing the compressor clutch click in and out or confirm seeing the clutch disk, on the front of the clutch pulley, move in and out.

Note: If the temperature is below 60° F; the thermostat will not close so you will have to put a jumper wire across the two thermostat terminals to activate the compressor clutch circuit.

Next, keeping both control handles in the vertical position, start the engine which drives the system's hydraulic pump and leave at idle. If the oil is cold, the unit may turn over slowly. As the oil warms up, the unit will probably stop.

Bring the unit on by turning the blue handle from vertical, slowly toward horizontal. As unit speed comes up, be sure all the components are operating freely and that the unit operates smoothly and quietly. CONFIRM that the motor pulley turns clockwise when facing the shaft. If not, the hydraulic drive system must be reviewed and corrected.

--C A U T I O N--

If you observe the operation of the unit
with the cover off, stay clear of the
condenser fan and belt drive system.

! IMPORTANT---IMPORTANT---IMPORTANT !

If all seems well, slowly increase engine speed to full operating RPM. At full RPM, unit motor speed should be 1700 +\- 100 RPM. Motor speed must never exceed 1800 RPM. This is a good point to check with a strobe tachometer. If the motor speed is not 1700 +/- 100 RPM, refer the problem to your hydraulic system design technician. If the temperature is above 60°F, the unit should now be cooling. If below 60°F, use a jumper across the thermostat terminals to engage the compressor for cooling so it can be checked out. Turn off the cooling by pulling the toggle switch down.

If all looks and sounds well, and the unit cools, remove the jumper from the thermostat, if used, install the sub top with the (10) screws you removed and then secure the weather cover with the (4) thumb screws found in the plastic bag tied to the GREEN lifting rod. From the cab, make sure the compressor toggle switch is down and set the blue handle to vertically down. The MacBone system is now ready for operation.

SYSTEM OPERATION

GENERAL: The *MacBone* unit's electrical requirement comes from the vehicle's engine control or ignition switch at 12 VDCOR 24 VDC. Either voltage is connected at the same point. Ideally, hydraulic drive oil is supplied by a dedicated, fixed displacement pump driven by the engine. Full MacBone unit speed will require full engine speed unless a variable displacement drive oil pump is used, which, if properly sized, will provide full unit speed at all engine speeds.

INITIAL STARTUP: Place the cooling toggle switch down to the off position. Place the BLUE control handle in the downward vertical position. Turn on the ignition. Start the engine. If the hydraulic oil is cold, the unit may roll over slowly.

After engine warm-up, bring the engine up to full operating speed. Slowly turn the BLUE control handle toward horizontal, which will control the unit fan speed variably from off to full. The faster the unit runs the more cooling capacity it will have. You may run the unit at any speed at any time.

FOR COOLING: With the unit at half to full fan speed, push the cooling toggle switch up and turn the thermostat knob fully clockwise. As the cab cools to the desired temperature, turn the thermostat counterclockwise until you hear the compressor cycle off. The thermostat will now cycle the compressor to maintain that temperature. You may change the unit speed or shut the unit off at any time with the blue handle.

TO STOP: Return the blue handle to the vertical position to shut the unit down. Before powering down the engine, we recommend that you shut down the unit, however this is not necessary. NO OPERATIONAL SEQUENCE OF ANY SORT WILL DO ANY DAMAGE TO THE *MACBONE* UNIT.

SERVICE

FILTER CLEANING: (See diagram on page 14) The condenser coil filter, or "outside" filter, is located on the end of the unit and is washable and reusable several times before replacement is required. To remove the filter, pull the filter out at the bottom and slide it down from under the weather cover and the cross bar. Use the reverse procedure to reinstall. The evaporator or "inside" filter, which is also washable and reusable, is located just above the control handles and is accessible by removing the weather cover and the large sub top which is secured with (10) self tapping screws, or can be folded and removed and replaced through the return air inlet.
The outside air filter, which is washable and reusable, is located in the same area as the inside filter and is secured with two wing nuts.

- - W A R N I N G - -

THE STANDARD *MACBONE* INSIDE AND OUTSIDE AIR FILTERS ARE COARSE AND WILL FILTER OUT ONLY DEBRIS AND LARGE PARTICLES. IF THE MACHINE'S OPERATING ENVIRONMENT CONTAINS AIRBORNE PARTICLES, HAZARDOUS TO THE HEALTH OF THE MACHINE'S OPERATORS,

THE STANDARD FILTERS MUST BE REPLACED WITH TYPES DESIGNED TO MEET DEFINED AIR QUALITY STANDARDS. CONTACT *MACBONE* ENGINEERING FOR FILTER TYPES AND AVAILABILITY.

OUTSIDE OR CONDENSER FILTER: Blow or wash clean as required. As this filter clogs, the system head pressure will rise and system capacity will drop. Ultimately, the high-pressure refrigerant relief valve will open and begin to periodically vent refrigerant. If you have reason to believe this has happened, check the refrigerant per the next paragraph.

- - W A R N I N G - -

REFRIGERANT CHARGING MUST BE DONE BY A
LICENSED AND PROPERLY EQUIPPED TECHNICIAN

REFRIGERANT CHECK: Refrigerant used is R-134A with a full charge of 1 lb. 6 oz., plus or minus 10%. A sight glass is located along the lower edge of the unit just below the hose connection area. While observing the glass, have someone turn the unit to the cooling mode. The glass should run clear within 30 seconds. If it does not clear, refrigerant is needed. Evacuate and recharge to 1 lb. 8 oz. or recharge to a clear glass plus 6 ounces. If the refrigerant visible in the sight glass is cloudy with a gray color, the compressor is wearing internally and should be scheduled for replacement.

LUBRICATION: The bearings in the hydraulic drive motor are supply oil lubricated. The compressor bearings are lubricated internally and the idler bearings are sealed, leaving only the two fan shaft bearings to be field lubricated. Lube these two bearings ONCE PER YEAR, stopping at the first sign of grease emerging from the bearing seals. No other lubrication is required or recommended.

BELTS: The (2) belts are Goodyear AX51, *MacBone* part no. D5010-51. A suitable replacement is the Gates AX51. The MacBone unit belt drive utilizes a spring loaded, backside idler so non-notched belts are not recommended. While the Gates AX51 is a suitable replacement, the Goodyear AX51 will provide better performance because its notches are closer together and not so deep. Belt replacement should be made annually or at 1500 hours, whichever comes first. To remove the old belts, cut the belts in half and discard. Do not remove belts by rolling them off the pulleys; cut them.

To install the new belts, proceed as follows after becoming familiar with the belt diagram on page 12:

1. TOOLS REQUIRED:
   3/8 drive ratchet w/ 6" extension
   3/8 drive sockets; 1/2" and 9/16".
   1/4" end wrench

2. EXTEND the idler tension spring by turning the 9/16 bolt on top of the spring <u>clockwise</u> until the spring-nut reaches its uppermost position, which allows the spring to extend and relax.

3. With the 1/4" end wrench, remove the (4) 1/4" hex head screws which hold the blower airinlet ring in place. Set the ring and (4) screws aside.

4. With the 1/2" ratchet, loosen and then completely remove the grade 8 set bolt, located just behind the blower, which secures the blower shaft coupling to the fan shaft.

5. Move the coupling/blower assembly off the shaft and place the (2) new belts through the gap.

6. Replace the coupling on the shaft and line the set bolthole up with the détente drilled in the shaft. Install the set bolt and torque to 10 foot pounds.

SUGGESTION

As you finger tighten the set bolt, rock the coupling gently to be sure you can feel the set bolt entering the drilled détente.

7. Replace the blower inlet ring. Tighten the 1/4" screws snugly but don't strip them out.

--CAUTION--

DO NOT FAIL TO REINSTALL THE INLET RING. AIR FLOW AND COOLING CAPACITY WILL BE SEVERELY REDUCED IF THE INLET RING IS LEFT OFF.

SUGGESTION

We have tried every possible belt replacement procedure and have concluded the following is by far the best.

8. Place one belt around the innermost compressor pulley groove, then OVER the motor pulley, then UNDER the idler, then start it OVER the fan shaft pulley. Now roll the belt into place onto the innermost fan shaft pulley groove by using the condenser fan blade to rotate the fan shaft. Install the second belt the SAME way in the outermost groove.

9. With the 9/16 socket, turn the idler spring bolt counterclockwise, to compress the idler spring. Using a business card as a gauge, compress the spring until the card is snug between the mid spring coils. This first adjustment should be checked after a day of operation and reset if necessary. Though this adjustment may be checked and corrected from time to time; it is, after the first readjustment, good for the life of the belts. Never tighten the spring so tight that the coils touch.

10. Finally, the idler tracking must be checked and possibly adjusted. To do this, the idler pulley can be adjusted from left to right on the idler shaft by rotating the idler adjusting, self locking, nut which is screwed onto the idler shaft. The idler is kept tight against the adjusting nut by a spring on the other side of the idler. Looking at the condenser fan from the shaft side, rotate the fan by hand in the clockwise direction. Adjust the idler pulley left or right until the drive belts track

evenly on the pulley. If the belts do not track evenly, and are not aligned, the idler will make excessive noise and will wear prematurely.

SPEED CONTROL VALVE: A ball valve, controlled by the blue handle, is the hydraulic motor bypass valve. With use, the stem packing will begin to weep so it must be inspected periodically and tightened as necessary using a 9/16" open-end wrench.

HELPFUL HINTS FROM THE FIELD

The device with the knob on it, next to the cooling toggle switch, is a comfort thermostat, NOT a freezestat. DO NOT INSERT THE THERMOSTAT SENSING TUBE INTO THE EVAPORATOR COIL FINS. Leave it coiled around the thermostat as originally assembled.

The hydraulic oil supply should be 6 GPM for a unit motor speed of 1750 RPM with the blue handle in the horizontal position and the engine at full speed. Every GPM less changes the unit motor speed 200 RPM less.

When changing belts, it helps to have a small hand when putting the first belt under the compressor's innermost pulley groove.

The top of the weather cover is not painted so as to reflect radiant heat for more efficient operation. DO NOT PAINT!

The blue speed control handle can be turned straight up as well as straight down to stop the unit. Horizontal to either side is full speed.

Evaporator condensate is piped to an area under the condenser coil from where the condenser fan pulls it across the condenser coil to evaporate it. In high humidity conditions, this condensate will emerge from each side of the unit as a wet mist. If this is undesirable, pull the tube from under the condenser coil and route it outside the unit. A hole in the sheet metal side is provided for this.

The lifting rod is painted green. Next to it is the refrigerant suction line covered by a rubber hose to prevent chafing. If you lift the unit by the suction line, the line will bend and break. Call 888-MACBONE for shipping instructions back to us for non-warranty repair.

The discharge air is very sensitive to being restricted, so please do not attach any sort of grill, duct, deflector or anything else to the discharge without consulting MacBone engineering. As we noted on page 2, don't position the unit where it will discharge directly on an operator's head; the discharge air is too cold and there is lots of it.

The hydraulic bypass control valve, which is controlled by the blue handle, has a packing gland which must be checked periodically to be sure it is snug and not leaking hydraulic fluid. The packing gland nut is tightened with a 9/16" wrench and can be done through the unit's side under the hose connection.

Voltage to the compressor clutch, when 24 VDC is applied to the MacBone unit, is controlled by a resistor which is sized to produce a voltage drop of 12 volts when the compressor clutch coil is energized. DO NOT connect any additional loads to the internal MacBone electrical circuit. To do so will imbalance the circuit resulting in compressor clutch coil failure. The power resistor is the 6 inch

long brown item next to the control panel. It gets hot if 24 volts is used so do not tie or tape any wires or anything else to it.

If the machine's engine operates at a constant speed at all times when the machine is working, use a simple fixed displacement pump on the engine to supply the drive oil.

If the machine's engine operates through a narrow speed range, not exceeding 50% change in speed, a fixed displacement pump and a priority valve is acceptable but inefficient.

- WARNING -

DO NOT USE A PRIORITY VLAVE
SETUP IF ENGINE SPEED VARIES
BY MORE THAN 50%. IF YOU DO
BAD THINGS WILL HAPPEN.

If the machine's engine operates over a speed range exceeding 50%, use a flow compensated, variable volume pump sized to deliver 6 GPM over the entire engine speed range.

BELT DRIVE SYSTEM

Belt Drive Diagram
(2 each) GOODYEAR AX51, MacBone PT# D5010-51
Substitute: GATES AX51. Use only notched belts.

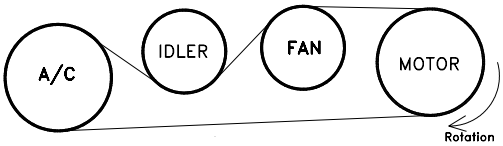

THE RIGHT WAY

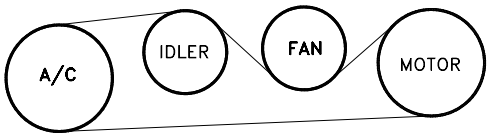

THE WRONG WAY

AIR FILTER LOCATIONS

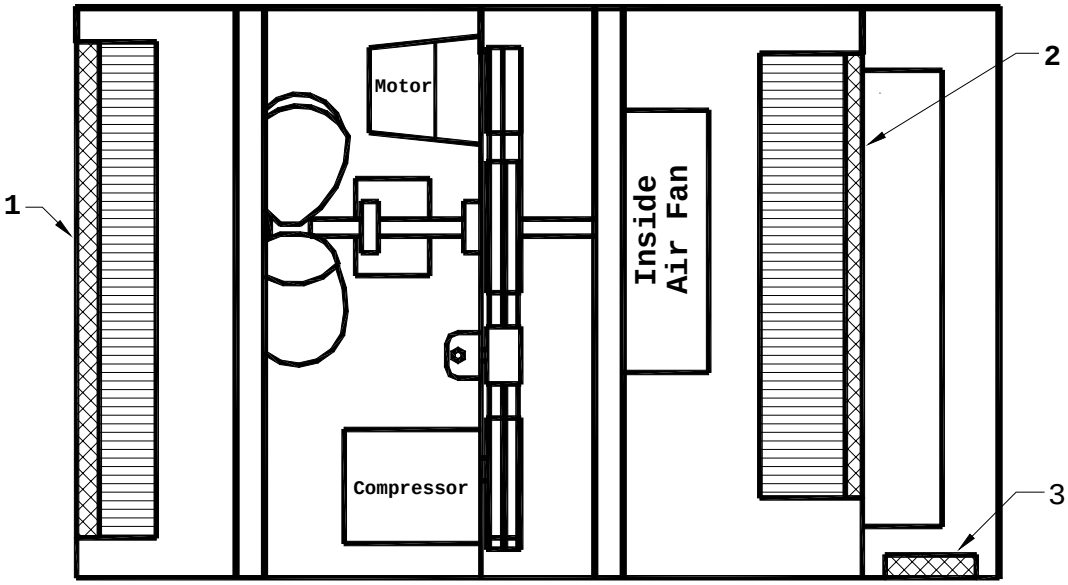

1 Condenser air filter	Part# A4101-01	11"x20"x1"
2 Inside air return filter	Part# A4101-02	10"x18"x½"
3 Ouside air intake filter	Part# A4101-03	5"x6"x1"

UNIT & SUBBASE INSTALLATION

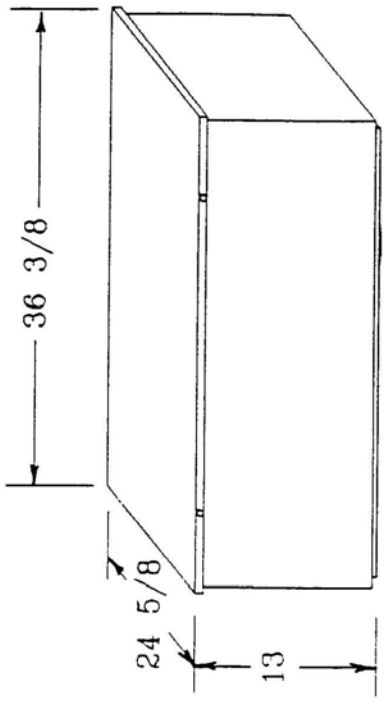

Overall MacBone SH 24 series unit dimensions are in inches.

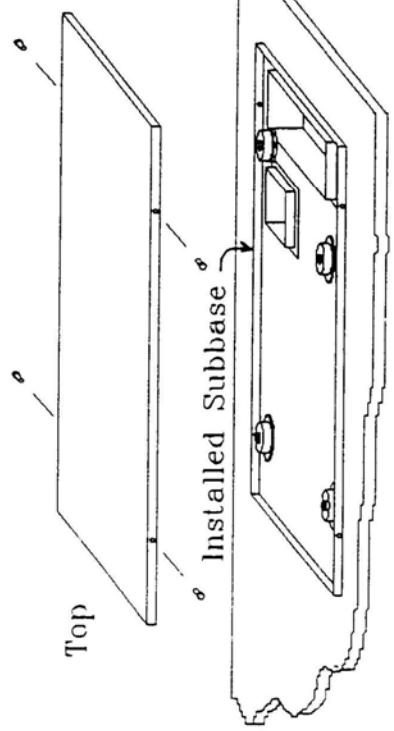

MacBone unit top can be installed directly over the subbase to seal the discharge and return air ducts if the unit is removed for any reason.

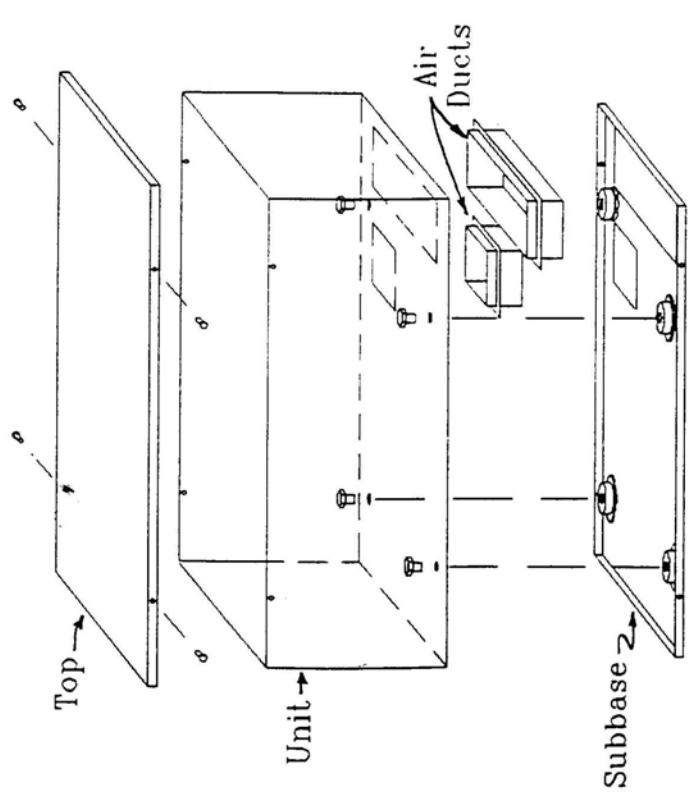

Basic MacBone unit components as their installation sequence relates to the cab roof.

ROOFTOP CUTOUTS

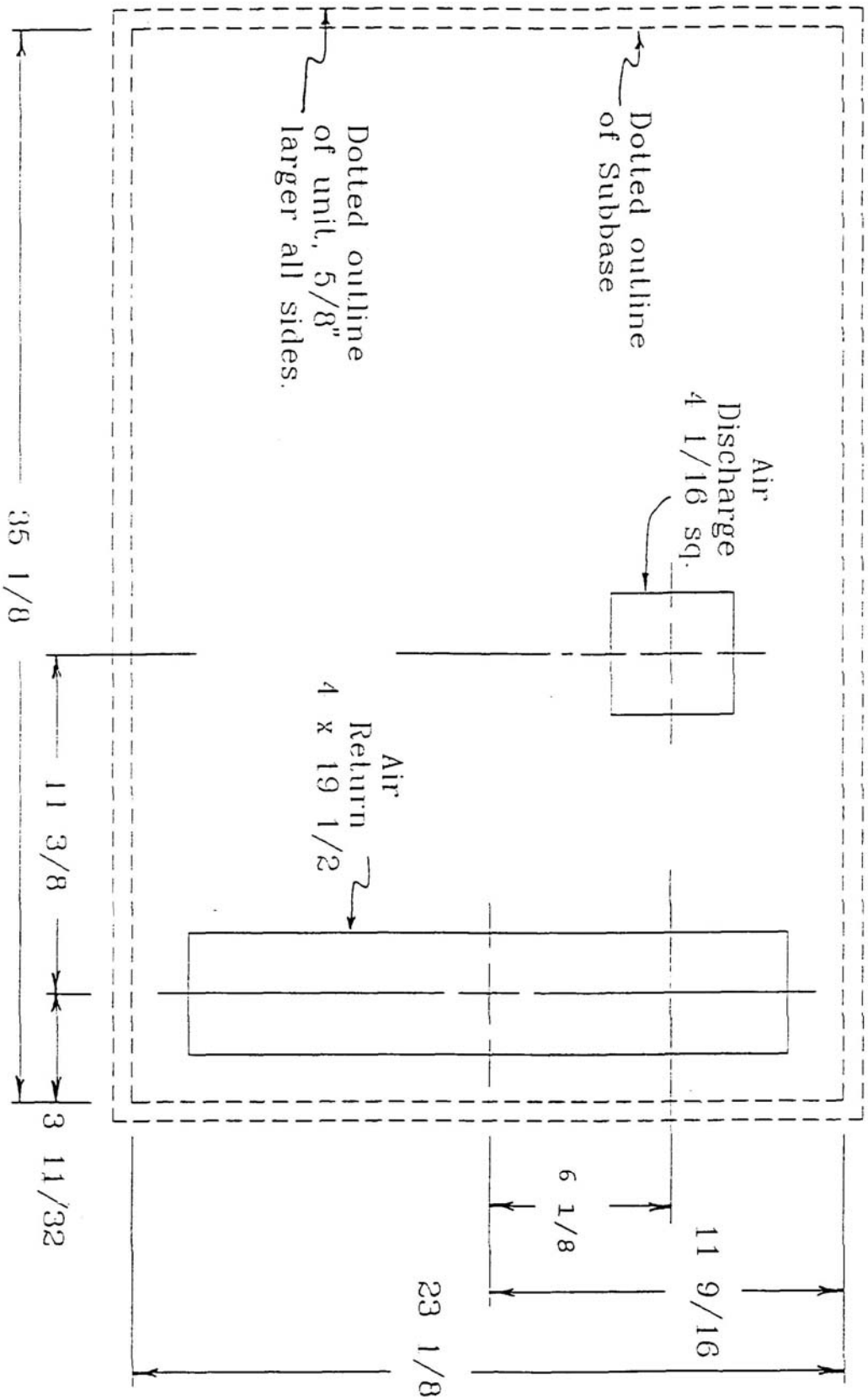

Cab roof cutout dimensions and layout for discharge and return air duct holes. After determining subbase placement, which avoids cutting critical roof structure, secure the subbase and use it as a template to cut the air duct holes.

WIRING

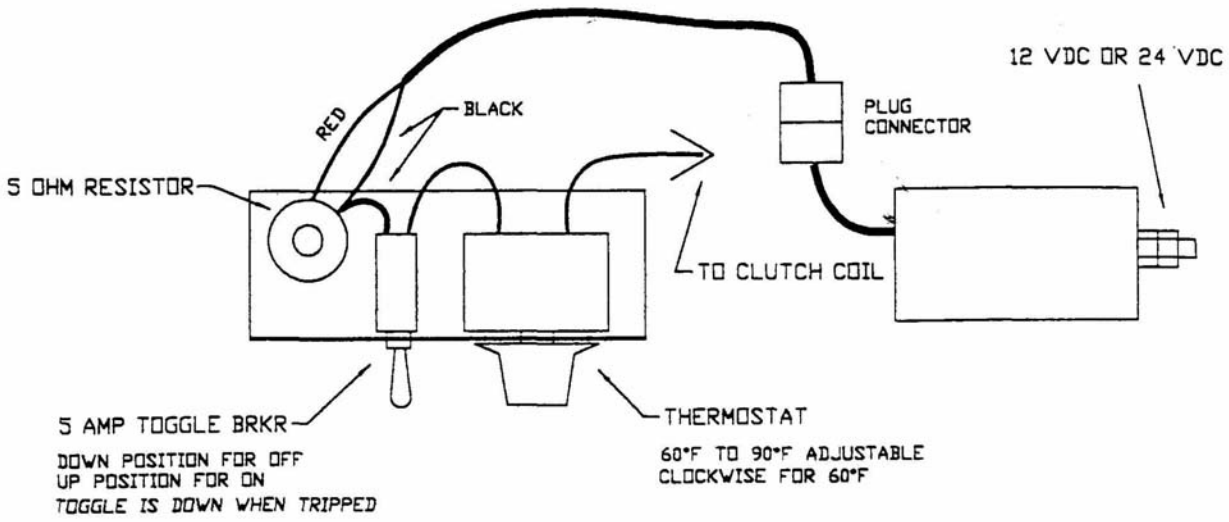

SH24-6 BASIC WIRING

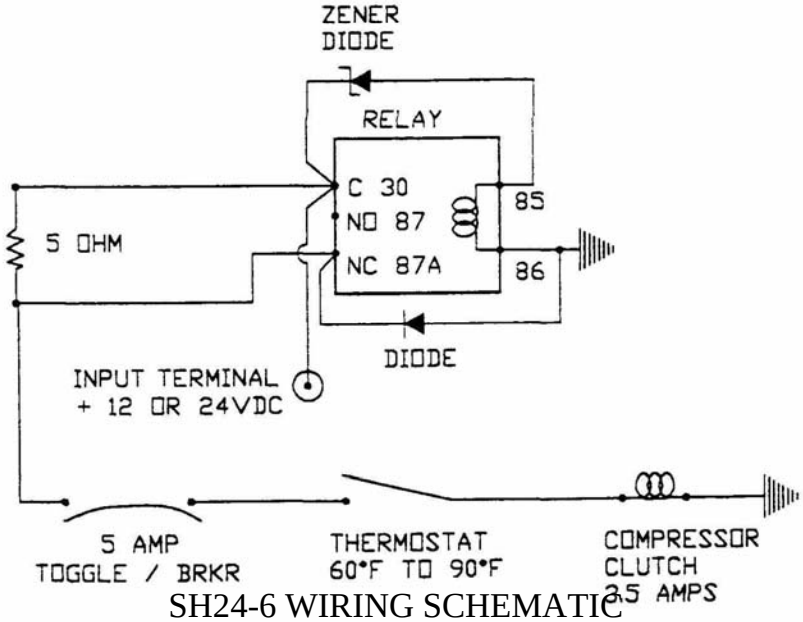

SH24-6 WIRING SCHEMATIC

SPECIFICATIONS

Color: Equipment yellow. Other colors are available on request.

Size: Installed on the sub base with the top in place: Length = 36 1/2" (92.8 cm), Width = 24 1/2" (62.2 cm), Height = 12 1/2" (31.8 cm).

Weight: Basic unit, 146# (66 kg). Unit with subbase, air ducts and top, 176# (80 kg).

Capacity: 24,000 BTU's/Hr. cooling at a unit motor speed of 1750 RPM at standard rating conditions.

Air Flow: Nominal 800 CFM delivered from the unit.

Electrical: 3.5 AMPS at 12 or 24 VDC.

Hydraulic Pump: Net pump output should be 6 GPM, 800 to 2300 PSI, constant volume, variable pressure. A dedicated pump is best. Call MacBone engineering for other possible options.

Unit Motor: Motor is a piston type with a displacement of .75 cubic inch/rev. and requires 6 GPM to operate at 1750 RPM. Drives compressor and fans through a dual V Belt drive, tensioned by a spring loaded idler. Requires a minimum of 25 PSIG return line back pressure at all times; see warning on page 3 for more details.

Hydraulic Lines: Supply and return hoses, 3/8" I.D. (#6). Case drain, 3/8" I.D. (#6).

Refrigerant: R-134A, approximately 1 lb, 6 oz.

Drive Belts: (2) "A" section, 1/2" wide (1.27cm) belts, Goodyear AX51.

Speed Control: Variable, manually operated.

Cooling Control: Thermostat; operator adjustable from 60° F to 90° F.

Air Filters: The inside or evaporator air filter is 10"(25.4cm) x 18"(45.72cm) x 1/2"(1.27cm). The outside or condenser air filter is 11"(27.94cm) x 20"(50.80cm) x 1"(2.54cm). Filters are washable and reusable or may be replaced with locally available filter material.

Lubrication: Fan shaft bearings are greased annually.

Service: Weekly, air filters should be cleaned. Monthly, the speed control valve stem packing nut should be tightened if leaking. Annually, the unit should be removed for cleaning, inspection of the (4) shock mounts and duct seals, lubrication of the fan shaft bearings and belt replacement.

Overhaul: Factory replacement of all wear-limited components should be considered after 6000 hours of operating time.

Materials: All sheet metal parts, except for the stainless steel top cover, are galvanized steel with exterior surfaces polymer powder-coated. All fasteners are grade 5 plated steel with self-locking nuts. Coils are copper tubes with aluminum fins. Refrigerant lines are copper with sleeved and flared or silver soldered joints. Hydraulic lines are steel, SAE 100R2 type, with a 4,000 PSI working pressure and a 16,000 PSI burst pressure. Top is stainless steel unpainted to reflect heat.

MACBONE A/C UNIT HYDRAULIC & ELECTRICAL TROUBLESHOOTING

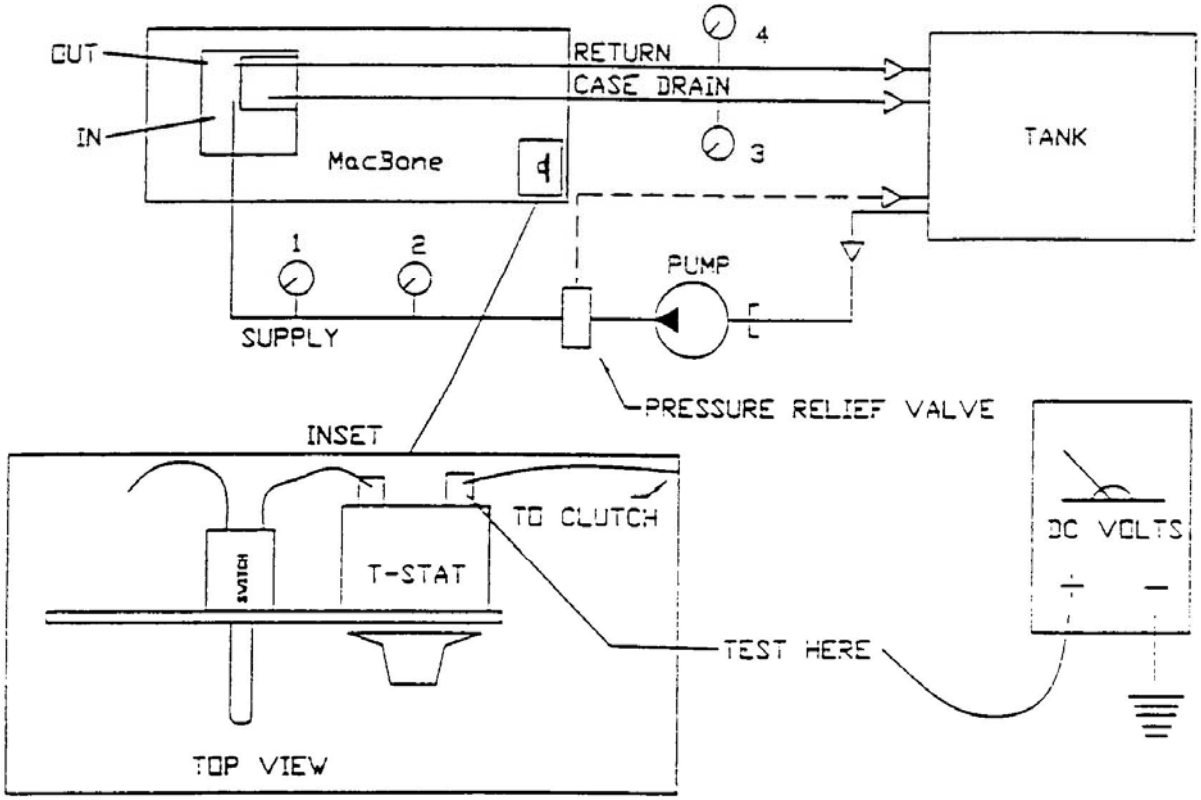

1. Oil Flow Rate: -Blue handle in horizontal position.
   -Engine at full operating RPM.
   -Reading taken at position 1.

   Flow must not exceed 6.5 GPM and must not be less than 3.5 GPM. For every 1 GPM below 6 GPM, cooling capacity drops by 20%. Full capacity is 2 tons @ 6 GPM.

2. Unit Pressure Drop: -Blue handle in horizontal position.
   -Engine at full operating RPM.
   -First reading taken with compressor not engaged.
   -Second reading taken with compressor engaged.
   -Readings taken at positions 2 and 4.

   Unit pressure drop is supply pressure minus return pressure. If return is absolutely known to return directly back to the tank, return pressure may be assumed to be zero.
   -Normal operating pressure drops:

   Compressor not engaged: 400 to 600 PSIG
   Compressor engaged: 2100 to 2300 PSIG

3. Case Drain Back Pressure: - At any time in any configuration.
-reading taken at position 3.

Back pressure must not exceed 15 PSIG.

4. Clutch Voltage: -Control panel switch in on (up) position.
-Thermostat turned clockwise until it stops.
-Hydraulic supply not necessary, Electrical energized.

Clutch voltage is measured from chassis ground (negative) to the right hand terminal of the thermostat (positive).

-Voltage:

0 – 5.0	VDC	The compressor will not run.
5.0 – 11.5	VDC	The clutch will eventually burn out.
11.5 – 14.0	VDC	The compressor will run normally.

Test Report

Fill out test report and call 1-888-MacBone (1-888-622-2663) for assistance.

Engine at full operating RPM.
Blue handle in horizontal position.

	Flow	Return Pressure	Supply Pressure	Case Drain Pressure
1. clutch not engaged:				
2. clutch engaged:				
3. clutch voltage at all times:				